Artafex

Project:	Type:
Product Code:	Date:

V092624

4" Round Adjustable

HIGH PERFORMANCE Produces up to 1000 lumens of True Spectrum™ lighting for natural, true-to-life colors without sacrificing stellar efficiency

PRECISE CONTROL Field-changeable light distribution ranging from 15° to 90°+

DIM TO DARK Smooth, flicker-free dimming down to 0.1% with centralized or local control

FAST INSTALL Integrated driver, plug-and-play connection, and Twist & Lock Trims

MODULAR DESIGN Flexibility during and after installation with interchangeable modules, optics and trims

INSTALLATION

Ceiling Thickness

New Construction: 1/2" up to 1 3/4"

Spray Foam: 1/2" up to 2"

Standard Remodel: 1/2" up to 1 1/4"

Fire Rated Remodel: 5/8" up to 1 1/4"

Low Profile: 1/2" up to 1 1/4"

Ceiling Material

Drywall, Millwork, Concrete

TRIMS

Style

Standard, Hyperbolic, Pinhole, Flangeless

Finish

White, Black, Bronze, Clear Diffuse, Warm Diffuse, Custom Color

LIGHT OUTPUT & DISTRIBUTION

Module

Adjustable

Adjustment

360° directional aim, 45° tilt

Lumens (Power)

750 lm (9.5W), 1000 lm (12.5W)

Color Quality

True Spectrum™, 2-step SDCM

Color Temperature

2700K 3000K 3500K

4000K Warm Dim (3000K–1800K)

Tunable White (4000K–1800K)

Beam Spread

15° Narrow Spot

25° Spot

40° Flood

60° x 30° Linear Spread

Soft Focus

POWER & CONTROLS

Input Voltage

120/277V

Dimming

TRIAC/ELV (1%), DALI-2 (0.1%)

RATINGS & CERTIFICATIONS

IC (Insulation Contact) Rated

ASTM E283 Certified Air Tight

Chicago Plenum

UL Listed for Damp Location

RoHS Compliant

DarkSky Approved
(CCT less than or equal to 3000K, non-decorative trims only)

Code compliant for use in fire-rated assemblies up to a maximum of 2-hours

NSF Listed
(White and Black Finish Only)

WARRANTY

10 year limited warranty; 50,000 hours

DMF LIGHTING 1118 E. 223rd St. Carson, CA 90745 323.934.7779 info@dmflighting.com **dmfLuxury.com**

© 2024 DMF Lighting. All Rights Reserved. Specifications subject to change without notice. See website for U.S. and international patent information.

PRODUCT BUILDER

HOUSING

PRODUCT CODE		APPLICATION		SHAPE		RATING	
M4				R			
M4	4" Housing	**NC**	New Construction	**R**	Round [2]	**S**	Standard [2]
		CP	Chicago Plenum [1]			**F**	Fire Rated [2]
		LT	Low Profile, TRIAC/ELV (3" Plenum)				
		DH	Double Housing [1]				
		RM	Remodel				
		CC	Concrete Construction				
		SF	Spray Foam [1]				

[1] Only available in Standard rating

[2] Not available for Concrete Construction installation

4" MODULE

PRODUCT CODE		LUMENS		COLORMETRIC		CCT		BEAM SPREAD		FINISH		DIMMING	
ART4A				T									
ART4A	Adjustable	**07**	750 lm [3]	**T**	True Spectrum™	**27**	2700K	**NS**	Narrow Spot (15°) [6]	**[Blank]**	Black	**T**	TRIAC/ELV
		10	1000 lm			**30**	3000K	**SP**	Spot (25°)	**W**	White	**D**	DALI-2 [8]
						35	3500K	**FL**	Flood (40°)				
						40	4000K	**LS**	Linear Spread (60° x30°)				
						3W	Warm Dim [4] (3000K– 1800K)	**SF**	Soft Focus [6]				
						T1	Tunable White [5] (4000K– 1800K)	**NH**	Narrow Spot w/ Hex Louver [6,7]				
								SH	Spot w/ Hex Louver [7]				
								FH	Flood w/ Hex Louver [7]				

[3] Only available in Tunable White or Linear Spread and Narrow Spot for Static CCT

[4] Only available in 1000 lm

[5] Only available in 750 lm for DALI-2

[6] Only available in 750 lm Static CCT with TRIAC Dimming

[7] Not available for DALI-2

[8] Only available in 750 lm Tunable White, and 1000 lm Warm Dim or static CCT

TRIM & ACCESSORIES

PRODUCT CODE		SHAPE		STYLE		FINISH		OPTION	
M4T		R							
M4T	4" Trim	**R**	Round	**S**	Standard	**WH**	White	**[Blank]**	None
				H	Hyperbolic [8]	**BK**	Black	**FL**	Flangeless [8,9,10]
				P	Pinhole [8]	**BZ**	Bronze		
						CW	Clear Diffuse, White Flange		
						WW	Warm Diffuse, White Flange		
						CC	Custom Color		

M4XRMUD	Flangeless Mud Plate *(Required for flangeless drywall application)*
M4KRTEMPLATE	Wood Template *(Recommended for Trim wood installatioin)*
M4CREXT	Extension Collar *(for ceiling install up to 3")* [11]

[8] Only available in White, Black, Bronze or Custom Color

[9] Not available for Square Conversion Trim or Concrete Construction Housing

[10] Mudplate is required for all Flangeless trims except for wood ceiling applications

[11] Only available for Standard New Construction installation

DMF LIGHTING 1118 E. 223rd St. Carson, CA 90745 323.934.7779 info@dmflighting.com **dmfLuxury.com**

© 2024 DMF Lighting. All Rights Reserved. Specifications subject to change without notice. See website for U.S. and international patent information.

PRODUCT BUILDER

OPTICS ACCESSORIES

PRODUCT CODE	
DID4X-NS	Adjustable Narrow Spot (15°)
DID4X-SP	Adjustable Spot (25°)
DID4X-FL	Adjustable Flood (40°)
DID4X-LS	Adjustable Linear Spread (60° x 30°)
DID4X-SF	Adjustable Soft Focus
DID4X-OP	Adjustable Optics Kit: Narrow Spot (15°), Spot (25°), Flood (40°), Linear Spread (60° x 30°), Soft Focus

© 2024 DMF Lighting. All Rights Reserved. Specifications subject to change without notice. See website for U.S. and international patent information.

MODULE

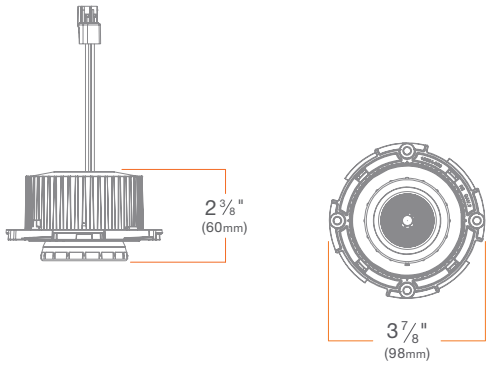

SUMMARY

	STATIC CCT	WARM DIM	TUNABLE WHITE
CCT	2700K, 3000K, 3500K, 4000K	3000K - 1800K	4000K - 1800K
LUMENS (POWER)	750 lm (9.7W), 1000 lm (12.0W)	1000 lm (12.0W)	750 lm (12.5W)
EFFICACY	77 lm/W, 83 lm/W	83 lm/W	60 lm/W
COLOR QUALITY	True Spectrum™ 98 CRI, 2-step SDCM	True Spectrum™ 93 CRI, 2-step SDCM	True Spectrum™ 93 CRI, 2-step SDCM
BEAM SPREAD	Narrow Spot (15°), Spot (25°), Flood (40°), Linear Spread (60° x 30°), Soft Focus	Spot (25°), Flood (40°), Linear Spread (60° x 30°), Soft Focus	Spot (25°), Flood (40°), Linear Spread (60° x 30°), Soft Focus
DIMMING	TRIAC/ELV [1], DALI-2	TRIAC/ELV [1], DALI-2	DALI-2
LED CHIP	Cree Pro 9	Bridgelux	Bridgelux
LISTINGS	ENERGY STAR® qualified [2], California Title 24 2016-2022 JA8-E compliant, UL Listed for Damp Location, UL Certified US·CA, Declare, RoHS compliant, NSF/ANSI 2 listed, suitable for splash-zone [3], DALI-2 Compliant, Dark Sky Compliant [4]		
ADJUSTMENT	360° directional aim, 45° tilt		
SLOPE CEILING COMPATIBILITY	Up to 45°		

[1] Dimming at 120V only
[2] Refer to ENERGY STAR Certified light fixtures database
[3] This product is evaluated in accordance to NSF/ANSI 2 for Splash Zone having designated trim finishes
[4] DarkSky Approved is only applicable to CCT Options less than or equal to 3000K

ADDITIONAL

INPUT VOLTAGE: 120/277V, 50/60Hz

MAX INPUT CURRENT (120V): 0.13 amps

MAX INPUT CURRENT (277V): 0.065 amps

CONNECTOR: PowerPlug® Luminaire Disconnect Model 182, 6-pin Molex

POWER FACTOR: Greater than 0.9

TOTAL HARMONIC DISTORTION: Less than 20%

AMBIENT OPERATING TEMPERATURE: -20°C to 40°C

WARRANTY: 10 year limited warranty; 50,000 hours at 70% lumen maintenance

© 2024 DMF Lighting. All Rights Reserved. Specifications subject to change without notice. See website for U.S. and international patent information.

HOUSING

New Construction

SUMMARY

JUNCTION BOX: Equipped with 10 knockouts: two 1/2" and two 3/4" trade size knockouts on top, two 1/2" trade size knockouts on side, four romex knockouts on top. Approved for 8 (four in, four out) #12 AWG 70°C.

MOUNTING: Pre-installed mounting brackets allow vertical adjustment of bar hangers up to 1 1/4".

CEILING: Standard Version (Deep): 1/2" to 1 3/4",
Low Profile Version: 1/2" to 1 1/4"

CUTOUT: 4 1/4" (108mm) round opening

LISTINGS: Metallic outlet box certified UL514A, code compliant for use in appropriate fire-rated assemblies for up to 2-hours (Fire Rated only), STC/IIC Sound Rated, ASTM E283 certified Air Tight, IC (Insulation Contact) rated

WARRANTY: 5 year limited warranty

ALTERNATE DIMMING SPECIFICATIONS

INPUT VOLTAGE: 120/277V, 50/60Hz

MAX INPUT CURRENT (120V): 0.130 amps

MAX INPUT CURRENT (277V): 0.065 amps

POWER FACTOR: Greater than 0.9

TOTAL HARMONIC DISTORTION: Less than 20%

© 2024 DMF Lighting. All Rights Reserved. Specifications subject to change without notice. See website for U.S. and international patent information.

New Construction

M4NCRS (Standard)
M4NCRF (Fire Rated)
M4CPRS (Chicago Plenum)

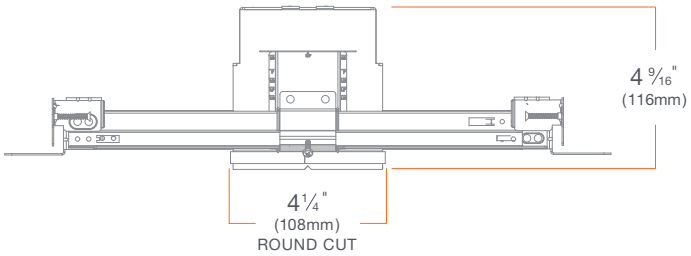

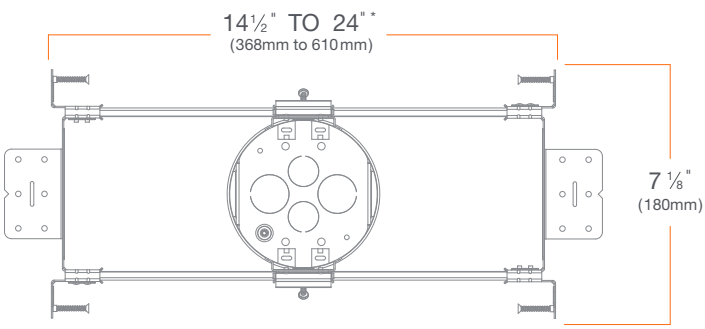

Low-Profile

M4LTRS (Standard)
M4LTRF (Fire Rated)

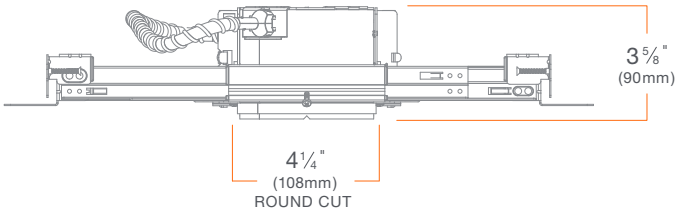

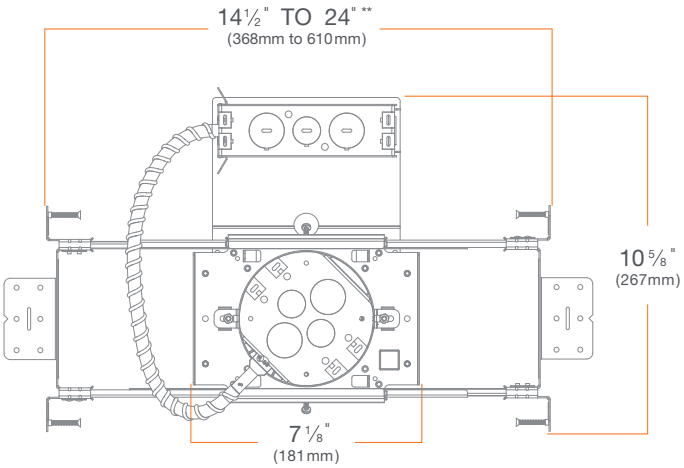

Double Housing

M4DHRS

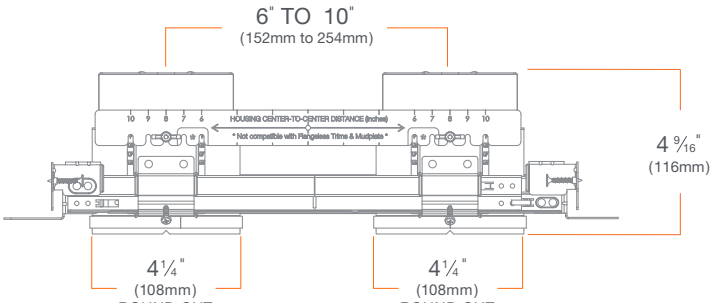

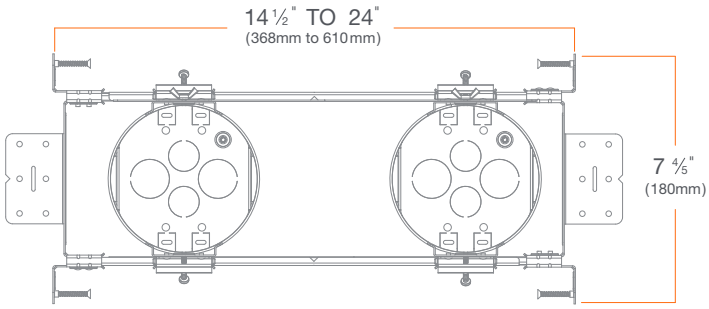

**Can be field cut to minimum 7 ½" (191mm)*
***Can be field cut to minimum 9" (229mm)*

© 2024 DMF Lighting. All Rights Reserved. Specifications subject to change without notice. See website for U.S. and international patent information.

HOUSING

Spray Foam

M4SFRS

SUMMARY

JUNCTION BOX: Equipped with six knockouts: four 1/2" trade size knockouts, two 3/4" trade size knockouts, and four romex knockouts. Approved for 8 (four in, four out) #12 AWG 70° C

MOUNTING: Adjustable Bar Hanger for 16" to 24" joist spacing. Compatible with traditional joists, Armstrong TM ceiling, Hat Channel and T-bar

CEILING: 1/2" to 2"

CUTOUT: 4 1/4" (108mm) round opening

LISTINGS: ASTM E283 certified Air Tight, IC (Insulation Contact) up to R-32 for Roll, Batt, and Loose Fill, up to R-60 Spray Foam with standard trims, up to R-32 Spray Foam with other trims or Hex Louver

WARRANTY: 5 year limited warranty

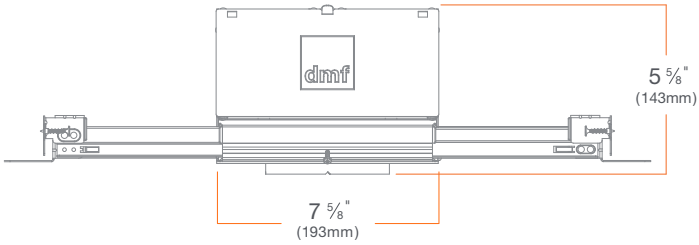

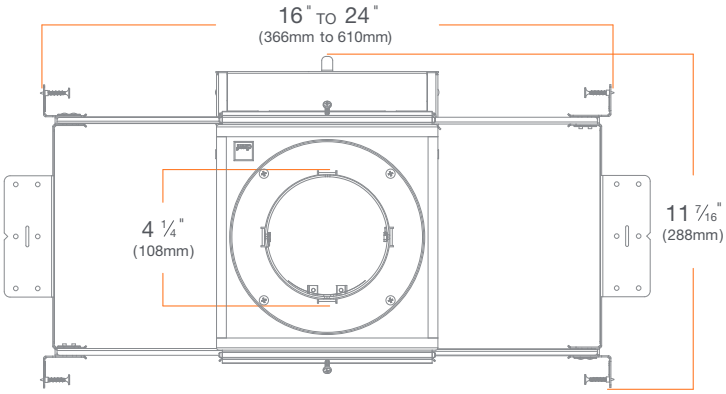

© 2024 DMF Lighting. All Rights Reserved. Specifications subject to change without notice. See website for U.S. and international patent information.

HOUSING

Remodel

SUMMARY

JUNCTION BOX: Equipped with 8 knockouts: two 1/2" and two 3/4" trade size knockouts on top, four romex knockouts on top. Approved for 8 (four in, four out) #12 AWG 70°C.

MOUNTING: Pre-installed mounting spring clips

CEILING: 1/2" up to 1 1/4" for Standard, 5/8" up to 1 1/4" for Fire rated

CUTOUT: 4 3/8" (111mm) round opening for Standard and 4 1/2" (114mm) round opening for Fire Rated

LISTINGS: Metallic outlet box certified UL514A, code compliant for use in appropriate fire-rated assemblies for up to 2-hours (Fire Rated only), STC/IIC Sound Rated, ASTM E283 certified Air Tight, IC (Insulation Contact) rated

WARRANTY: 5 year limited warranty

Standard

M4RMRS

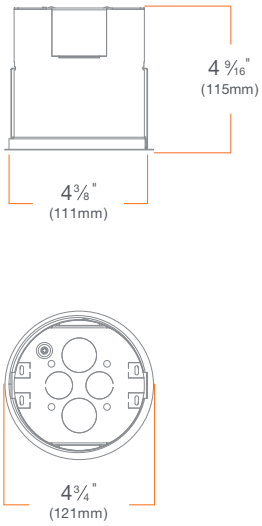

Fire Rated

M4RMRF

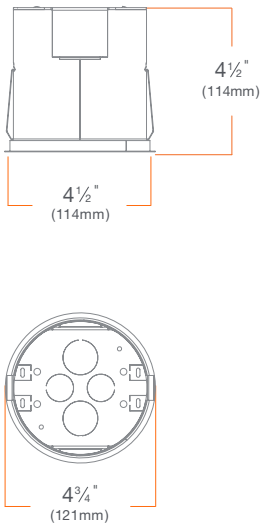

© 2024 DMF Lighting. All Rights Reserved. Specifications subject to change without notice. See website for U.S. and international patent information.

HOUSING

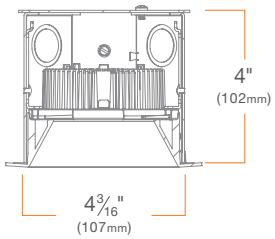

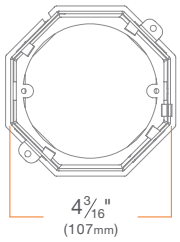

Concrete Construction

M4CC

SUMMARY

JUNCTION BOX: Equipped with (4) trade size concentric knockouts (3/4" + 1/2") to allow straight conduit runs. Approved for 8 (four in, four out) #12 AWG 90°C.

MOUNTING: (2) external tabs for wood, steel or concrete mounting

COVER: Removable top cover for easy access to electrical wiring work prior to concrete pour

APPLICATION: Poured deck (floor) high-rise new construction

LISTINGS: Metallic outlet box certified UL514A, concrete tight, code compliant for use in appropriate fire-rated assemblies for up to 2-hours, STC/IIC Sound Rated, ASTM E283 certified Air Tight

WARRANTY: 5 year limited warranty

© 2024 DMF Lighting. All Rights Reserved. Specifications subject to change without notice. See website for U.S. and international patent information.

TRIMS

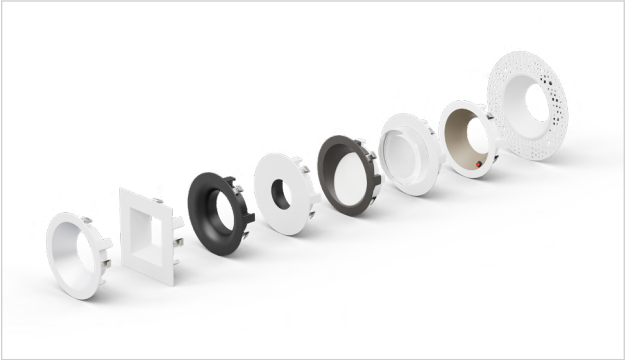

4" Round Trims

M4TR

SUMMARY

CONSTRUCTION: Die-cast aluminum

INSTALLATION: Twist & Lock

Standard

M4TRSWH

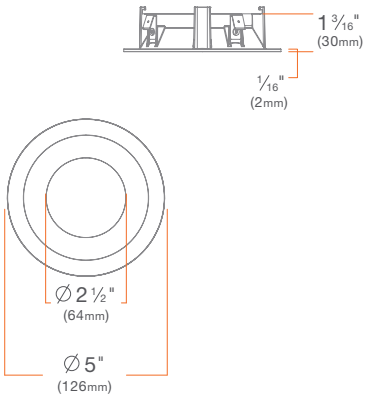

Standard Flangeless

M4TRSWHFL

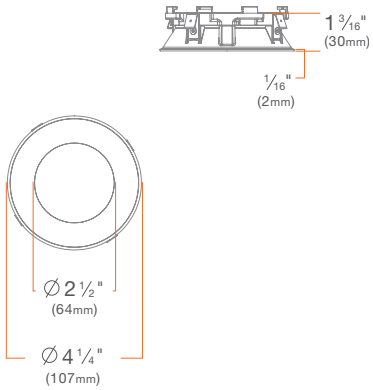

Hyperbolic

M4TRHWH

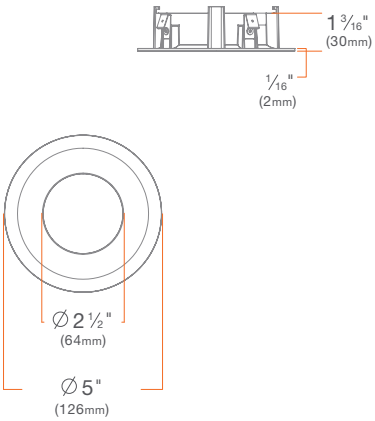

Hyperbolic Flangeless

M4TRHWHFL

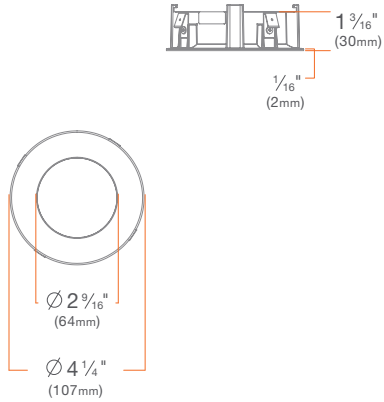

© 2024 DMF Lighting. All Rights Reserved. Specifications subject to change without notice. See website for U.S. and international patent information.

TRIMS

Pinhole

M4TRPWH

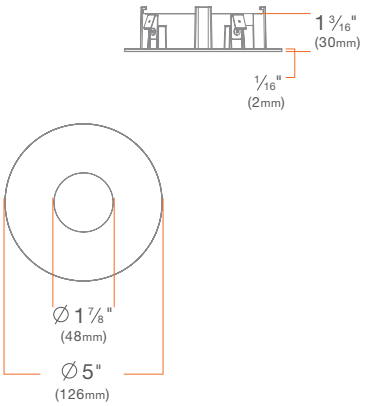

Pinhole Flangeless

M4TRPWHFL

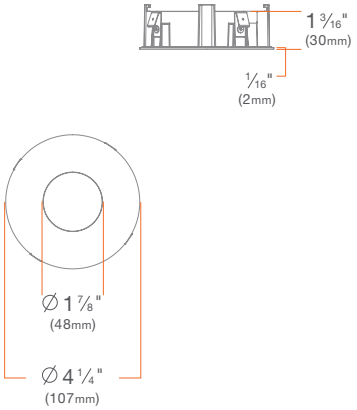

© 2024 DMF Lighting. All Rights Reserved. Specifications subject to change without notice. See website for U.S. and international patent information.

ACCESSORIES

Flangeless Mud Plate

M4XRMUD

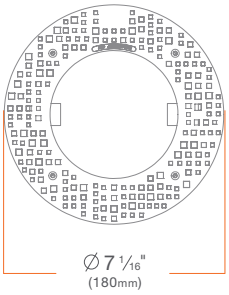

Wood Template

M4KRTEMPLATE

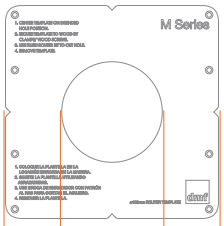

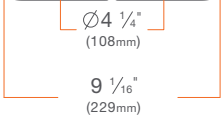

Retrofit Kit - 6" to 4"

** Please refer to individual retrofit spec sheet*

M4KRRETRO6

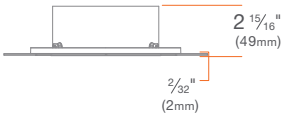

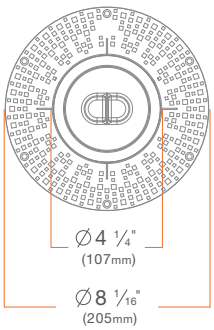

Extension Collar

** For use with Standard New Construction Only*

M4CREXT

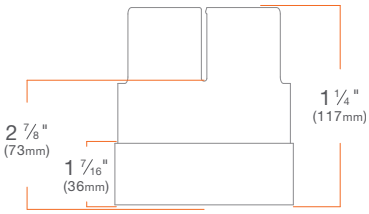

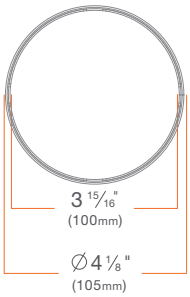

© 2024 DMF Lighting. All Rights Reserved. Specifications subject to change without notice. See website for U.S. and international patent information.

PHOTOMETRY

ART4A 750 lm, 3000K, Narrow Spot

ART4AM07930NS

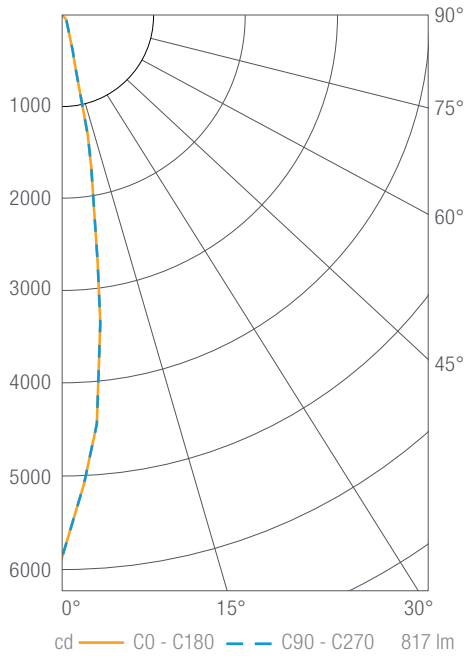

Luminous Intensity

Gamma	C 0°
0º	5897
5º	4418
10º	1911
15º	561
20º	280
25º	165
30º	117
35º	87
40º	69
45º	57
50º	47
55º	38
60º	31
65º	23
70º	16
75º	10
80º	4
85º	1
90º	0

Values in candela

Zonal Lumen Summary

Zone	Lumens	Luminaire %
0-30	645	79
0-40	701	86
0-60	781	96
0-90	817	100
0-180	817	100

Illuminance Chart

Distance from LED	Foot Candles	Diameter
3'	655	0.8'
6'	164	1.7'
9'	73	2.5'
12'	41	3.3'

Beam Angle: 16°

ART4A 750 lm, 3000K, Spot

ART4AM07930SP

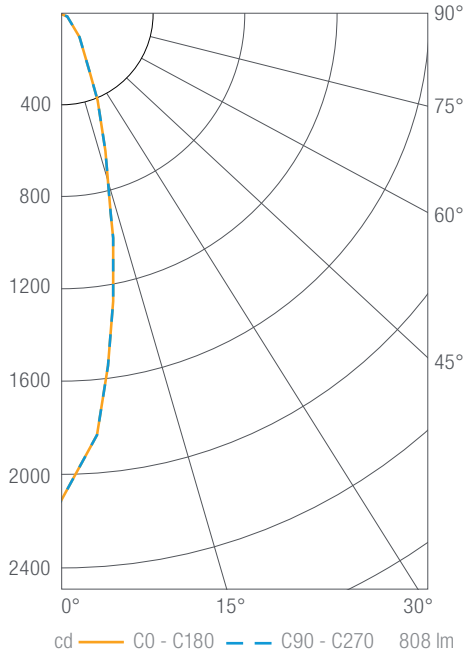

Luminous Intensity

Gamma	C 0°
0º	2105
5º	1826
10º	1282
15º	800
20º	497
25º	310
30º	201
35º	137
40º	98
45º	73
50º	57
55º	45
60º	35
65º	23
70º	12
75º	5
80º	3
85º	2
90º	0

Values in candela

Zonal Lumen Summary

Zone	Lumens	Luminaire %
0-30	573	71
0-40	668	83
0-60	773	96
0-90	808	100
0-180	808	100

Illuminance Chart

Distance from LED	Foot Candles	Diameter
3'	234	1.3'
6'	58	2.6'
9'	26	3.9'
12'	15	5.2'

Beam Angle: 28°

© 2024 DMF Lighting. All Rights Reserved. Specifications subject to change without notice. See website for U.S. and international patent information.

PHOTOMETRY

ART4A 750 lm, 3000K, Flood

ART4AM07930FL

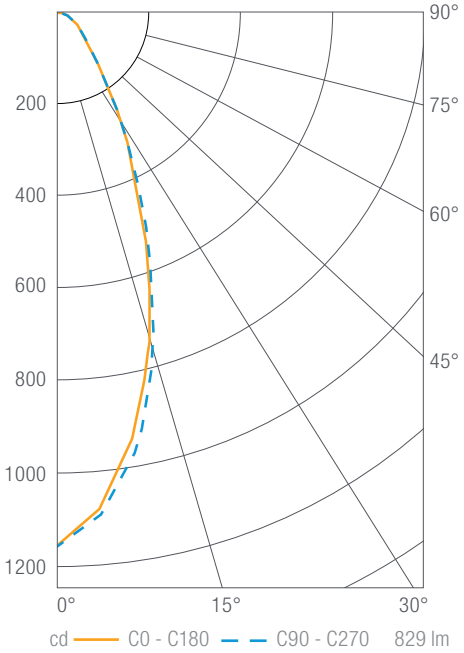

Luminous Intensity

Gamma	C 0°
0º	1158
5º	1081
10º	941
15º	765
20º	576
25º	414
30º	288
35º	192
40º	130
45º	96
50º	76
55º	61
60º	49
65º	38
70º	28
75º	18
80º	10
85º	4
90º	0

Values in candela

Zonal Lumen Summary

Zone	Lumens	Luminaire %
0-30	510	62
0-40	633	76
0-60	766	92
0-90	829	100
0-180	829	100

Illuminance Chart

Distance from LED	Foot Candles	Diameter
3'	129	2.2'
6'	32	4.5'
9'	14	6.7'
12'	8	9.0'

Beam Angle: 41°

ART4A 750 lm, 3000K, Linear Spread

ART4AM07930LS

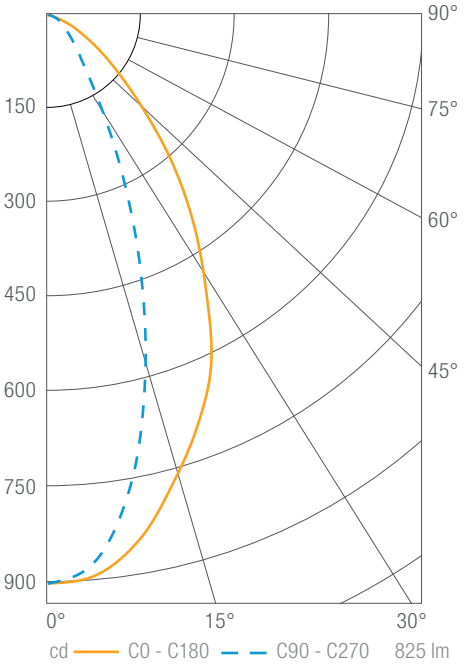

Luminous Intensity

Gamma	C 0°
0º	895
5º	885
10º	838
15º	763
20º	689
25º	608
30º	497
35º	399
40º	305
45º	216
50º	150
55º	103
60º	66
65º	41
70º	17
75º	4
80º	1
85º	1
90º	0

Zonal Lumen Summary

Zone	Lumens	Luminaire %
0-30	468	57
0-40	626	76
0-60	790	96
0-90	825	100
0-180	825	100

Illuminance Chart

Distance from LED	Foot Candles	Diameter
3'	99.5	3.8'
6'	24.9	7.7'
9'	11.1	11.5'
12'	6.2	15.3'

Beam Angle: 38°

© 2024 DMF Lighting. All Rights Reserved. Specifications subject to change without notice. See website for U.S. and international patent information.

PHOTOMETRY

ART4A 750 lm, 3000K, Soft Focus

ART4AM07930SF

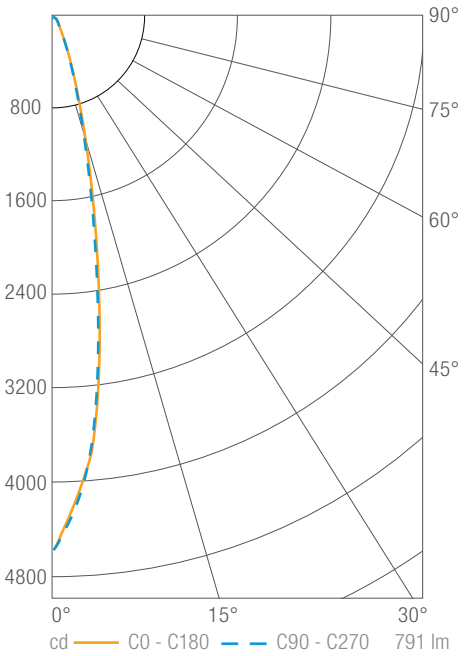

Luminous Intensity

Gamma	C 0°
0º	4451
5º	3648
10º	2150
15º	1009
20º	465
25º	227
30º	125
35º	82
40º	62
45º	49
50º	40
55º	32
60º	25
65º	17
70º	9
75º	3
80º	1
85º	1
90º	0

Values in candela

Zonal Lumen Summary

Zone	Lumens	Luminaire %
0-30	661	84
0-40	710	90
0-60	771	97
0-90	791	100
0-180	791	100

Illuminance Chart

Distance from LED	Foot Candles	Diameter
3'	495	1.0'
6'	124	2.1'
9'	55	3.1'
12'	31	4.1'

Beam Angle: 19°

© 2024 DMF Lighting. All Rights Reserved. Specifications subject to change without notice. See website for U.S. and international patent information.