Artafex

Project:	Type:
Product Code:	Date:

V090224

4" Square Downlight

HIGH PERFORMANCE Produces up to 1000 lumens of True Spectrum™ lighting for natural, true-to-life colors without sacrificing stellar efficiency

PRECISE CONTROL Field-changeable light distribution ranging from 15° to 90°+

DIM TO DARK Smooth, flicker-free dimming down to 0.1% with centralized or local control

FAST INSTALL Integrated driver, plug-and-play connection, and Twist & Lock Trims

MODULAR DESIGN Flexibility during and after installation with interchangeable modules, optics and trims

INSTALLATION

Ceiling Thickness

New Construction: 1/2" up to 1 3/4"

Spray Foam: 1/2" up to 2"

Remodel: 5/8" up to 1 1/4"

Low Profile: 1/2" up to 1 1/4"

Ceiling Material

Drywall, Millwork, Concrete

TRIMS

Style

Standard, Pinhole, Flangeless, Wall Wash, Decorative

Finish

White, Black, Bronze, Clear Diffuse, Warm Diffuse, Custom Color

LIGHT OUTPUT & DISTRIBUTION

Module

Downlight

Lumens (Power)

1000 lm (12.0W), 1250 lm (14.3W)

Color Quality

True Spectrum™, 2-step SDCM

Color Temperature

2700K 3000K 3500K

4000K Warm Dim (3000K–1800K)

Tunable White (4000K–1800K)

Beam Spread

15° Narrow Spot

25° Spot

40° Flood

60° Wide Flood

90°+ General

40° x 20° Linear Spread

Soft Focus

POWER & CONTROLS

Input Voltage

120/277V

Dimming

TRIAC/ELV (1%), DALI-2 (0.1%)

RATINGS & CERTIFICATIONS

IC (Insulation Contact) Rated

ASTM E283 Certified Air Tight

Chicago Plenum

UL Listed for Wet Location
(Standard Trim only)

RoHS Compliant

DarkSky Approved
(CCT less than or equal to 3000K, non-decorative trims only)

Code compliant for use in fire-rated assemblies up to a maximum of 2-hours

NSF Listed
(White and Black Finish Only)

WARRANTY

10 year limited warranty; 50,000 hours

DMF LIGHTING 1118 E. 223rd St. Carson, CA 90745 323.934.7779 info@dmflighting.com **dmfLuxury.com**

© 2024 DMF Lighting. All Rights Reserved. Specifications subject to change without notice. See website for U.S. and international patent information.

PRODUCT BUILDER

HOUSING

PRODUCT CODE		APPLICATION		SHAPE		RATING	
M4				S			
M4	4" Housing	**NC**	New Construction	**S**	Square	**S**	Standard
		CP	Chicago Plenum [1]			**F**	Fire Rated
		LT	Low Profile, TRIAC/ELV (3" Plenum)				
		RM	Remodel				
		SF	Spray Foam [1]				

[1] Only available in Standard rating

4" MODULE

PRODUCT CODE		LUMENS		COLORMETRIC		CCT		BEAM SPREAD		FINISH		DIMMING	
ART4D				T						-			
ART4D	Downlight	**10**	1000 lm	**T**	True Spectrum™	**27**	2700K	**GA**	General Ambient (90°+)	**[Blank]**	Black	**T**	TRIAC/ELV
		12	1250 lm [2]			**30**	3000K	**NS**	Narrow Spot (15°) [5]			**D**	DALI-2 [6]
						35	3500K	**SP**	Spot (25°)				
						40	4000K	**FL**	Flood (40°)				
						3W	Warm Dim [3] (3000K– 1800K)	**WF**	Wide Flood (60°)				
						T1	Tunable White [4] (4000K– 1800K)	**LS**	Linear Spread (40° x 20°)				
								SF	Soft Focus				

[2] Only available in DALI-2 with fixed CCT
[3] Only available in 1000 lm
[4] Only available in 1000 lm for DALI-2
[5] Not available in Warm Dim or Tunable White
[6] Only available in 1000 lm for Tunable White or Warm Dim, and 1250 lm static CCT

TRIM

PRODUCT CODE		SHAPE		STYLE		FINISH		OPTION	
M4T		S							
M4T	4" Trim	**S**	Square	**S**	Standard	**WH**	White	**[Blank]**	None
				Q	Round on Square	**BK**	Black	**DCF**	Decorative: Closed, Frosted [3,8,9,10]
				P	Pinhole [7]	**BZ**	Bronze	**DCC**	Decorative: Closed, Clear, Frosted Side [3,8,9,10]
				W	Wall Wash [8]	**CW**	Clear Diffuse, White Flange	**DCCF**	Decorative: Closed, Clear, Frosted Inside [3,8,9,10]
						WW	Warm Diffuse, White Flange	**FL**	Flangeless [7,11,12,13]
						CC	Custom Color		

M4XSMUD	Flangeless Mud Plate *(Required for flangeless drywall application)*
M4KSTEMPLATE	Wood Template *(Recommended for use with wood routers in wood or millwork applications)*

[7] Only available in White, Black, Bronze or Custom Color finish
[8] Only available for General Ambient beam spread
[9] Only available in White or Custom Color finish
[10] Only available in Standard style
[11] Not available for Square Conversion Trim or Concrete Construction Housing
[12] Mudplate is required for all FL trims except for wood ceiling applications
[13] Not compatible with square spray foam housing

© 2024 DMF Lighting. All Rights Reserved. Specifications subject to change without notice. See website for U.S. and international patent information.

PRODUCT BUILDER

OPTICS ACCESSORIES

PRODUCT CODE	
DID2X-GA	Fixed Conversion Kit: 4" Downlight Module to General Ambient (90°+)
DID2X-NS	Fixed Narrow Spot (15°)
DID2X-SP	Fixed Spot (25°)
DID2X-FL	Fixed Flood (40°)
DID2X-WF	Fixed Wide Flood (60°)
DID2X-LS	Fixed Linear Spread (40° x 20°)
DID2X-SF	Fixed Soft Focus
DID2X-OP	Fixed Optics Kit: Narrow Spot (15°), Spot (25°), Flood (40°), Wide Flood (60°), Linear Spread (40° x 20°), Soft Focus

© 2024 DMF Lighting. All Rights Reserved. Specifications subject to change without notice. See website for U.S. and international patent information.

MODULE

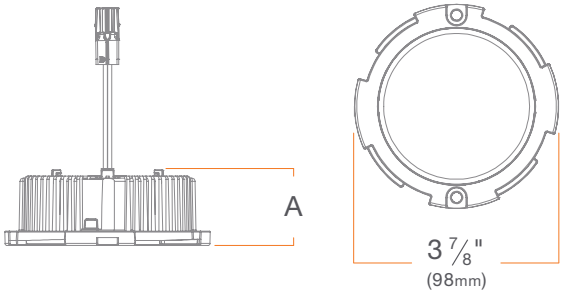

Measurements	A
Standard	1 7/16" [37 mm]
DALI-2	2" [50 mm]

SUMMARY

	STATIC CCT	WARM DIM	TUNABLE WHITE
CCT	2700K, 3000K, 3500K, 4000K	3000K - 1800K	4000K - 1800K
LUMENS (POWER)	1000 lm (12.0W), 1250 lm (14.3W)	1000 lm (12.0W)	1000 lm (14.0W)
EFFICACY	83 lm/W, 87 lm/W	83 lm/W	71 lm/W
COLOR QUALITY	True Spectrum™ 98 CRI, 2-step SDCM	True Spectrum™ 93 CRI, 2-step SDCM	True Spectrum™ 93 CRI, 2-step SDCM
BEAM SPREAD	General Ambient (90°+), Narrow Spot (15°), Spot (25°), Flood (40°), Wide Flood (60°) Linear Spread (40° x 20°), Soft Focus	General Ambient (90°+), Spot (25°), Flood (40°), Wide Flood (60°) Linear Spread (40° x 20°), Soft Focus	General Ambient (90°+), Spot (25°), Flood (40°), Wide Flood (60°) Linear Spread (40° x 20°), Soft Focus
DIMMING	TRIAC/ELV, DALI-2	TRIAC/ELV, DALI-2	DALI-2
LED CHIP	Cree Pro9	Bridgelux	Bridgelux
LISTINGS	ENERGY STAR® qualified [1], California Title 24 2016-2022 JA8-E compliant, UL Listed for Wet Location, UL Certified US·CA, Declare, RoHS compliant, NSF/ANSI 2 listed, suitable for splash-zone [2], DALI-2 Compliant, Dark Sky Compliant [3]		

[1] Refer to ENERGY STAR Certified light fixtures database

[2] This product is evaluated in accordance to NSF/ANSI 2 for Splash Zone having designated trim finishes

[3] DarkSky Approved is only applicable to CCT Options less than or equal to 3000K

ADDITIONAL

INPUT VOLTAGE: 120/277V, 50/60Hz

MAX INPUT CURRENT (120V): 0.13 amps

MAX INPUT CURRENT (277V): 0.065 amps

CONNECTOR: PowerPlug® Luminaire Disconnect Model 182, 6-pin Molex

POWER FACTOR: Greater than 0.9

TOTAL HARMONIC DISTORTION: Less than 20%

AMBIENT OPERATING TEMPERATURE: -20°C to 40°C

WARRANTY: 10 year limited warranty; 50,000 hours at 70% lumen maintenance

© 2024 DMF Lighting. All Rights Reserved. Specifications subject to change without notice. See website for U.S. and international patent information.

HOUSING

New Construction

SUMMARY

JUNCTION BOX: Equipped with 12 knockouts: four 1/2" trade size knockouts on side, two 3/4" and two 1/2" trade size knockouts on top and four romex knockouts on top. Approved for 8 (four in, four out) #12 AWG 70°C.

MOUNTING: Pre-installed mounting brackets allow vertical adjustment of bar hangers up to 1 1/4"

CEILING: Standard Version (Deep): 1/2" to 1 3/4"
Low Profile Version: 1/2" to 1 1/4"

CUTOUT: 4" (102mm) square opening

LISTINGS: Metallic outlet box certified UL514A, code compliant for use in appropriate fire-rated assemblies for up to 2-hours (Fire Rated only), STC/IIC Sound Rated, ASTM E283 certified Air Tight, IC (Insulation Contact) rated

WARRANTY: 5 year limited warranty

ALTERNATE DIMMING SPECIFICATIONS

INPUT VOLTAGE: 120/277V, 50/60Hz

MAX INPUT CURRENT (120V): 0.090 amps, 0.107 amps

MAX INPUT CURRENT (277V): 0.042 amps, 0.050 amps

POWER FACTOR: Greater than 0.9

TOTAL HARMONIC DISTORTION: Less than 20%

© 2024 DMF Lighting. All Rights Reserved. Specifications subject to change without notice. See website for U.S. and international patent information.

New Construction

M4NCSS (Standard)
M4NCSF (Fire Rated)
M4CPSS (Chicago Plenum)

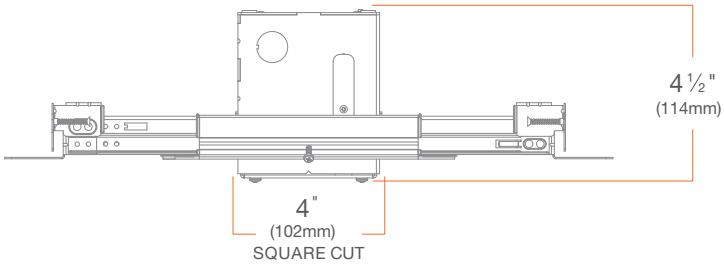

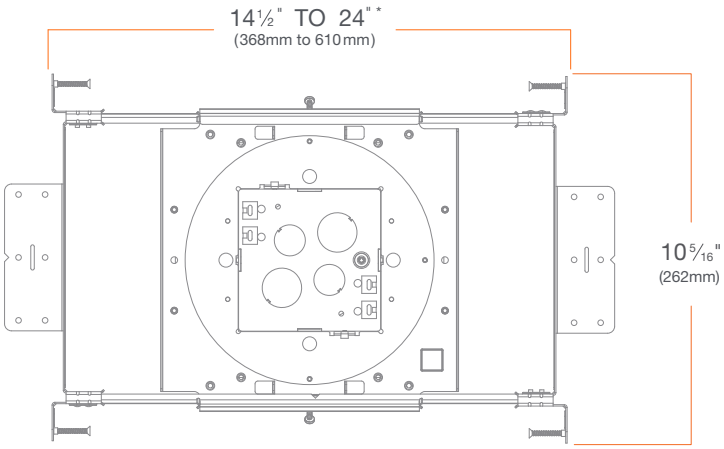

Low-Profile

M4LTSS (Standard)
M4LTSF (Fire Rated)

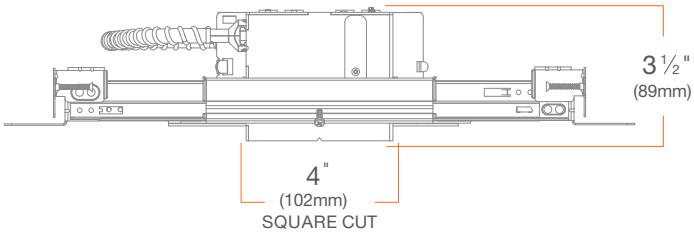

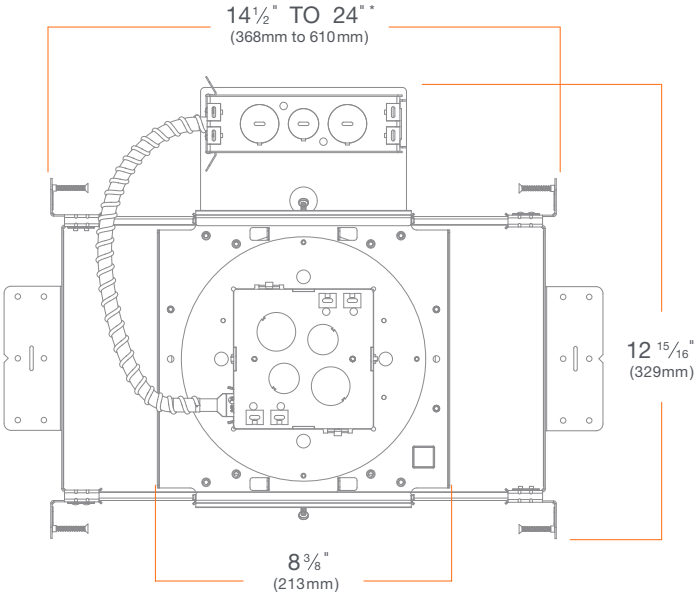

**Can be field cut to minimum 10" (254mm)*

© 2024 DMF Lighting. All Rights Reserved. Specifications subject to change without notice. See website for U.S. and international patent information.

HOUSING

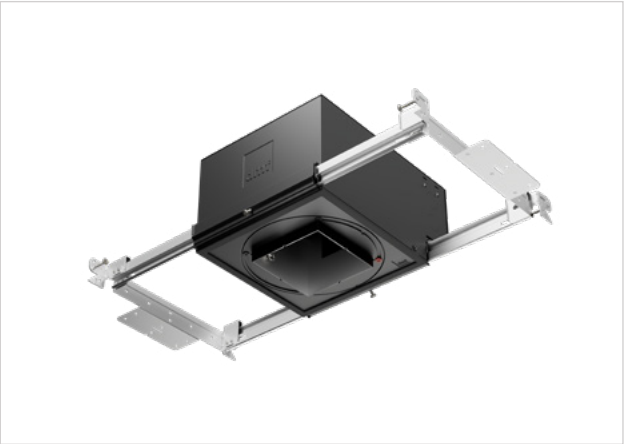

Spray Foam

M4SFRS

SUMMARY

JUNCTION BOX: Equipped with six knockouts: four 1/2" trade size knockouts, two 3/4" trade size knockouts, and four romex knockouts. Approved for 8 (four in, four out) #12 AWG 70° C

MOUNTING: Adjustabel Bar Hanger for 16" to 24" joist spacing. Compatible with traditional joists, Armstrong TM ceiling, Hat Channel and T-bar

CEILING: 1/2" to 2"

CUTOUT: 4" (102mm) square opening

LISTINGS: ASTM E283 certified Air Tight, IC (Insulation Contact) up to R-32 for Roll, Batt, and Loose Fill, up to R-60 Spray Foam with standard trims, up to R-32 Spray Foam with other trims

WARRANTY: 5 year limited warranty

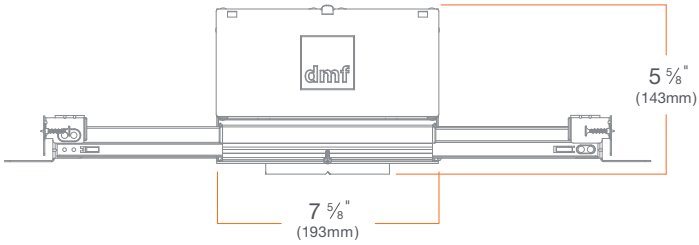

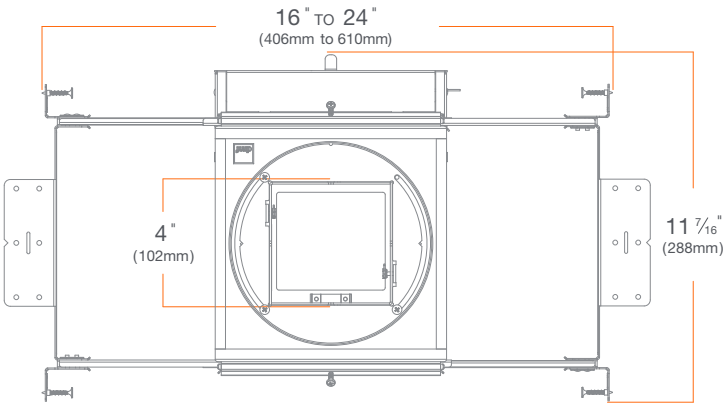

© 2024 DMF Lighting. All Rights Reserved. Specifications subject to change without notice. See website for U.S. and international patent information.

HOUSING

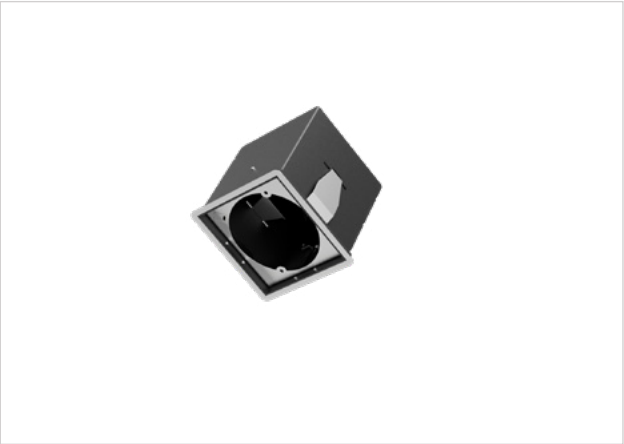

Remodel

M4RMSS (Standard)
M4RMSF (Fire Rated)

SUMMARY

JUNCTION BOX: Equipped with 8 knockouts: four 1/2" trade size knockouts on side, two 3/4" and two 1/2" trade size knockouts on top and four romex knockouts on top. Approved for 8 (four in, four out) #12 AWG 70°C.

MOUNTING: Pre-installed mounting spring clips

CEILING: 5/8" up to 1 1/4"

CUTOUT: 4" (102mm) square opening

LISTINGS: Metallic outlet box certified UL514A, code compliant for use in appropriate fire-rated assemblies for up to 2-hours (Fire Rated only), STC/IIC Sound Rated, ASTM E283 certified Air Tight, IC (Insulation Contact) rated

WARRANTY: 5 year limited warranty

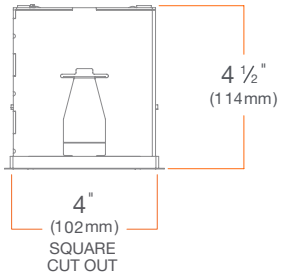

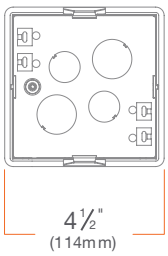

© 2024 DMF Lighting. All Rights Reserved. Specifications subject to change without notice. See website for U.S. and international patent information.

TRIMS

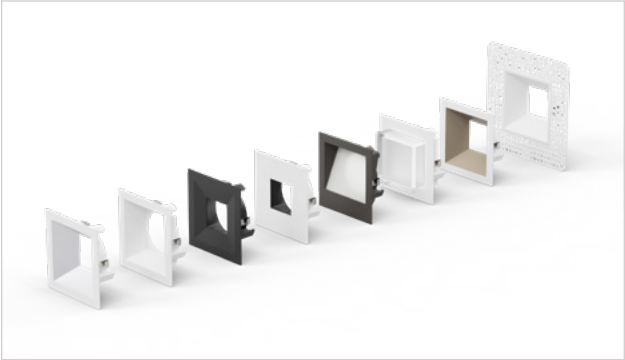

4" Square Trims

M4TS

SUMMARY

CONSTRUCTION: Die-cast aluminum

INSTALLATION: Twist & Lock

Standard

M4TSSWH

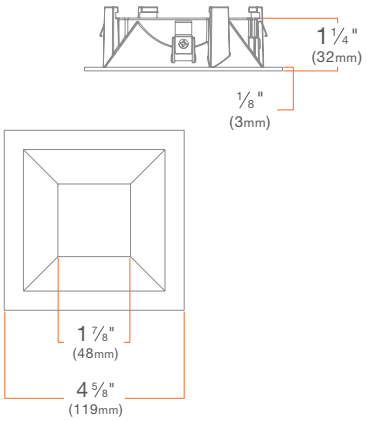

Round on Square

M4TSQWH

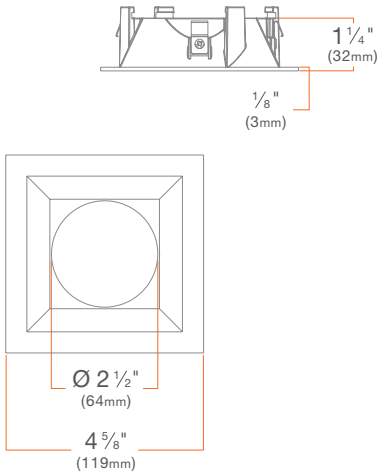

Pinhole

M4TSPWH

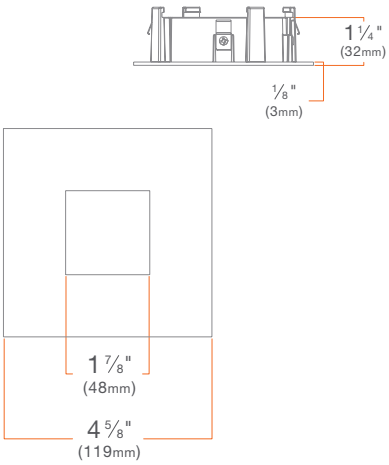

Wall Wash

Round: **M4TSWWH**

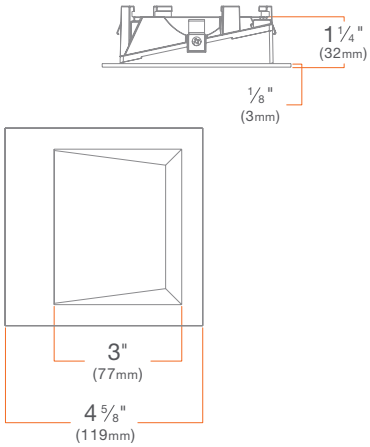

© 2024 DMF Lighting. All Rights Reserved. Specifications subject to change without notice. See website for U.S. and international patent information.

TRIMS

Standard Flangeless

M4TSSWHFL

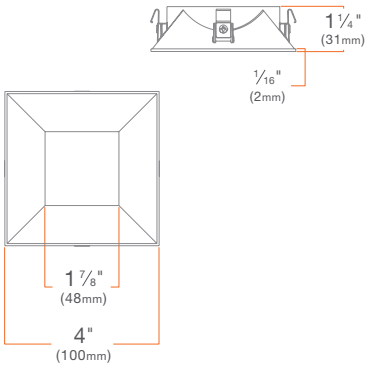

Round On Square Flangeless

M4TSQWHFL

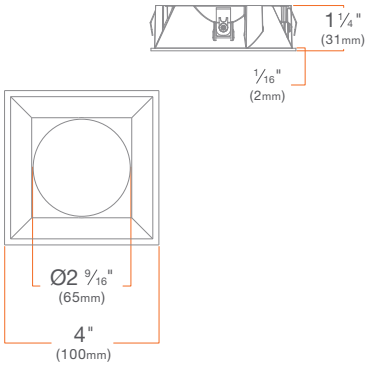

Pinhole Flangeless

M4TSPWHFL

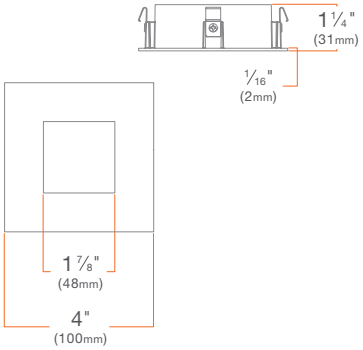

Wall Wash Flangeless

M4TSWWHFL

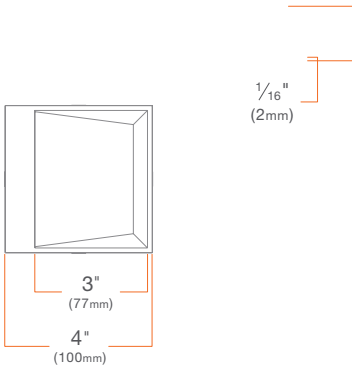

Decorative Closed

Frosted: **M4TSSWHDCF**

Clear, Frosted Sides: **M4TSSWHDCCF**

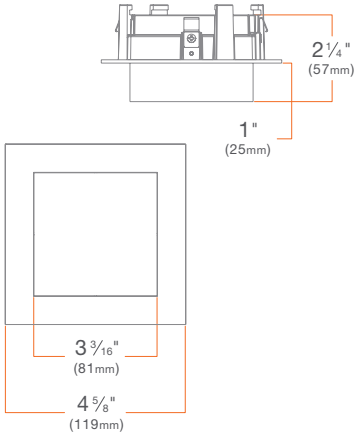

© 2024 DMF Lighting. All Rights Reserved. Specifications subject to change without notice. See website for U.S. and international patent information.

ACCESSORIES

Flangeless Mud Plate

M4XSMUD

Wood Template

M4KSTEMPLAT

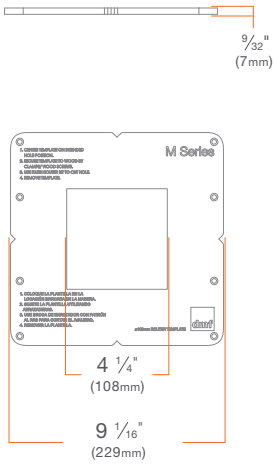

Retrofit Kit - 6" to 4"

** Please refer to individual retrofit spec sheet*

M4KSRETRO6

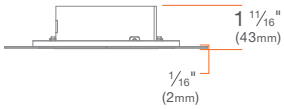

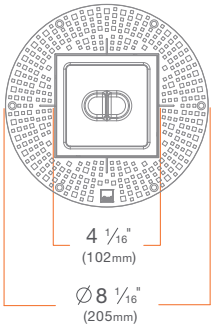

© 2024 DMF Lighting. All Rights Reserved. Specifications subject to change without notice. See website for U.S. and international patent information.

PHOTOMETRY

ART4D 1000 lm, 3000K, Narrow Spot

ART4DM10930NS

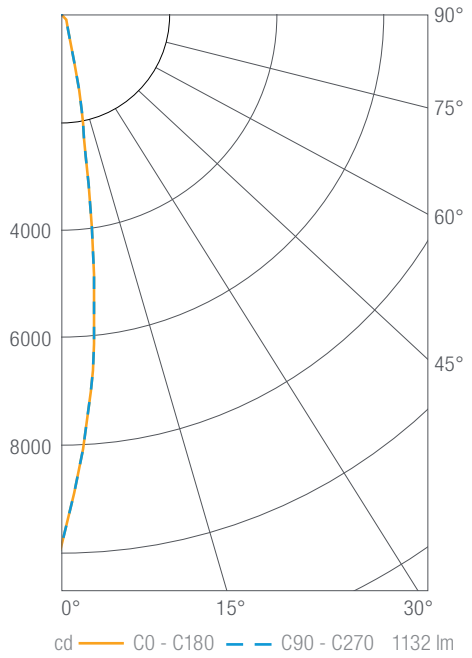

Luminous Intensity

Gamma	C 0°
0º	9823
5º	6600
10º	2335
15º	734
20º	357
25º	244
30º	195
35º	159
40º	116
45º	85
50º	61
55º	42
60º	28
65º	16
70º	7
75º	4
80º	2
85º	1
90º	0

Values in candela

Zonal Lumen Summary

Zone	Lumens	Luminaire %
0-30	906	80
0-40	1004	89
0-60	1110	98
0-90	1131	100
0-180	1132	100

Illuminance Chart

Distance from LED	Foot Candles	Diameter
3'	1091	0.7'
6'	273	1.5'
9'	121	2.2'
12'	68	2.9'

Beam Angle: 14°

**For use with New Construction Only*

ART4D 1000 lm, 3000K, Spot

ART4DM10930SP

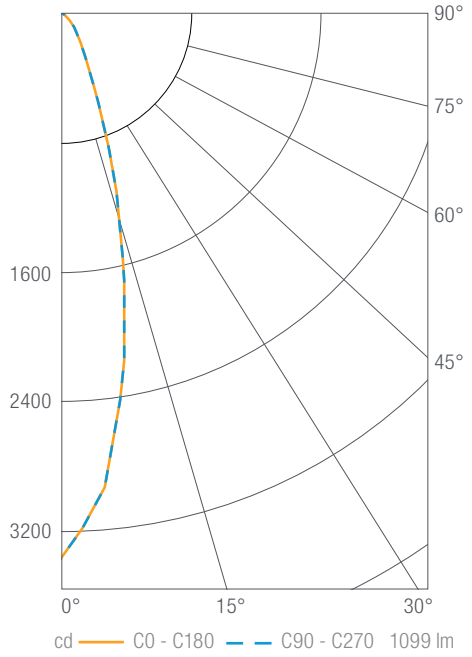

Luminous Intensity

Gamma	C 0°
0º	3366
5º	2967
10º	2203
15º	1391
20º	775
25º	419
30º	248
35º	167
40º	119
45º	87
50º	62
55º	43
60º	26
65º	15
70º	7
75º	4
80º	2
85º	1
90º	0

Values in candela

Zonal Lumen Summary

Zone	Lumens	Luminaire %
0-30	862	78
0-40	971	88
0-60	1078	98
0-90	1098	100
0-180	1099	100

Illuminance Chart

Distance from LED	Foot Candles	Diameter
3'	374	1.4'
6'	93	2.8'
9'	42	4.2'
12'	23	5.6'

Beam Angle: 26°

© 2024 DMF Lighting. All Rights Reserved. Specifications subject to change without notice. See website for U.S. and international patent information.

PHOTOMETRY

ART4D 1000 lm, 3000K, Flood

ART4DM10930FL

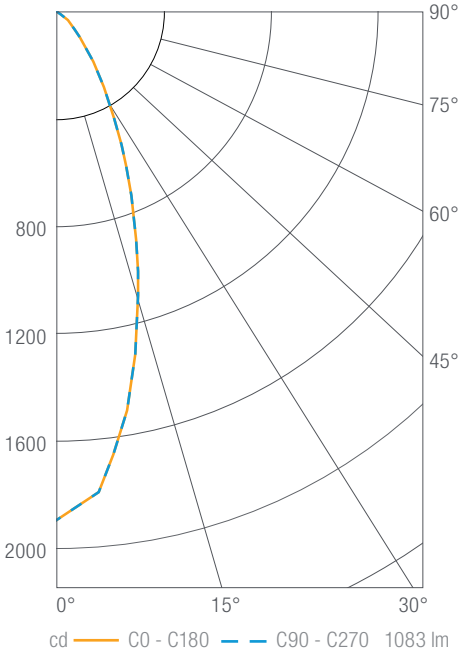

Luminous Intensity

Gamma	C 0°
0º	1890
5º	1792
10º	1503
15º	1161
20º	849
25º	589
30º	391
35º	256
40º	162
45º	107
50º	74
55º	51
60º	30
65º	18
70º	8
75º	5
80º	3
85º	1
90º	0

Values in candela

Zonal Lumen Summary

Zone	Lumens	Luminaire %
0-30	760	70
0-40	925	85
0-60	1058	98
0-90	1081	100
0-180	1083	100

Illuminance Chart

Distance from LED	Foot Candles	Diameter
3'	210	2.0'
6'	52	4.0'
9'	23	6.0'
12'	13	8.0'

Beam Angle: 37°

ART4D 1000 lm, 3000K, Wide Flood

ART4DM10930WF

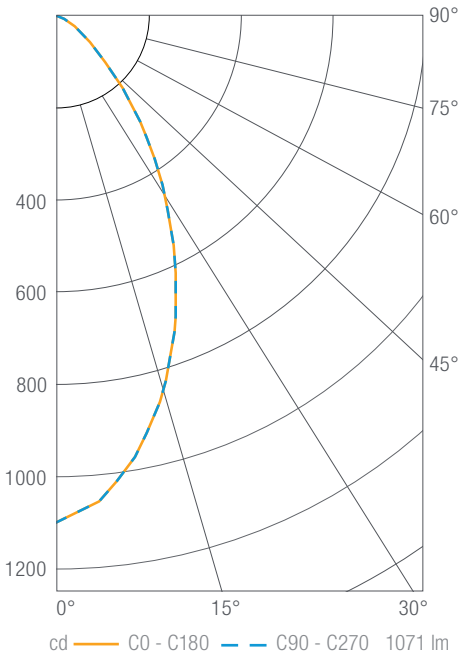

Luminous Intensity

Gamma	C 0°
0º	1100
5º	1058
10º	973
15º	866
20º	743
25º	609
30º	478
35º	361
40º	252
45º	161
50º	102
55º	68
60º	41
65º	24
70º	11
75º	6
80º	4
85º	2
90º	0

Values in candela

Zonal Lumen Summary

Zone	Lumens	Luminaire %
0-30	620	58
0-40	845	79
0-60	1037	97
0-90	1069	100
0-180	1071	100

Illuminance Chart

Distance from LED	Foot Candles	Diameter
3'	122	3.1'
6'	31	6.2'
9'	14	9.3'
12'	8	12.3'

Beam Angle: 55°

© 2024 DMF Lighting. All Rights Reserved. Specifications subject to change without notice. See website for U.S. and international patent information.

PHOTOMETRY

ART4D 1000 lm, 3000K, General Ambient

ART4DM10930GA

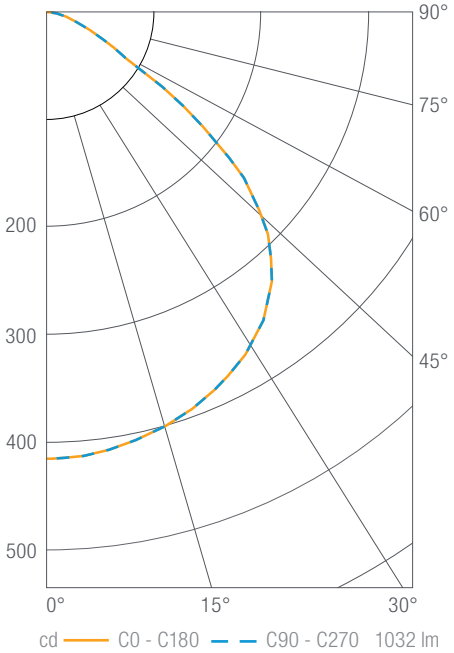

Luminous Intensity

Gamma	C 0°
0º	416
5º	415
10º	410
15º	403
20º	394
25º	382
30º	369
35º	351
40º	327
45º	291
50º	240
55º	162
60º	84
65º	54
70º	33
75º	21
80º	12
85º	6
90º	1

Values in candela

Zonal Lumen Summary

Zone	Lumens	Luminaire %
0-30	333	32
0-40	557	54
0-60	942	91
0-90	1024	99
0-180	1032	100

Illuminance Chart

Distance from LED	Foot Candles	Diameter
3'	46	7.8'
6'	12	15.5'
9'	5	23.3'
12'	3	31.1'

Beam Angle: 100°

ART4D 1000 lm, 3000K, Linear Spread

ART4DM10930LS

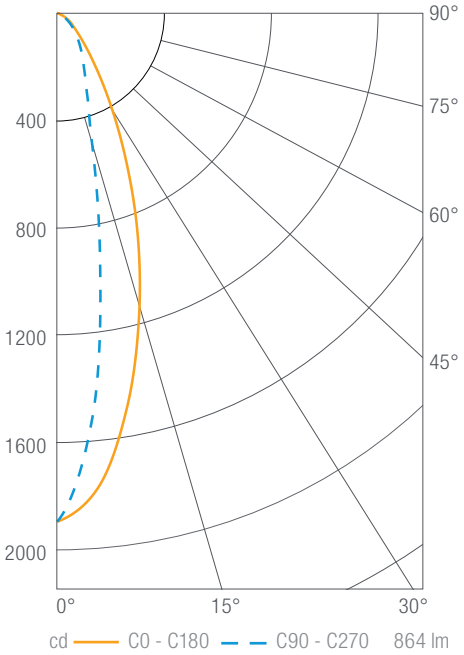

Luminous Intensity

Gamma	C 0°
0º	1876
5º	1755
10º	1480
15º	1165
20º	868
25º	602
30º	399
35º	258
40º	169
45º	114
50º	82
55º	62
60º	43
65º	24
70º	9
75º	6
80º	4
85º	1
90º	0

Values in candela

Zonal Lumen Summary

Zone	Lumens	Luminaire %
0-30	580	67
0-40	711	82
0-60	836	97
0-90	864	100
0-180	864	100

Illuminance Chart

Distance from LED	Foot Candles	Diameter
3'	209	2.1'
6'	52	4.2'
9'	23	6.4'
12'	13	8.5'

Beam Angle: 20°

© 2024 DMF Lighting. All Rights Reserved. Specifications subject to change without notice. See website for U.S. and international patent information.

PHOTOMETRY

ART4D 1000 lm, 3000K, Soft Focus

ART4DM10930SF

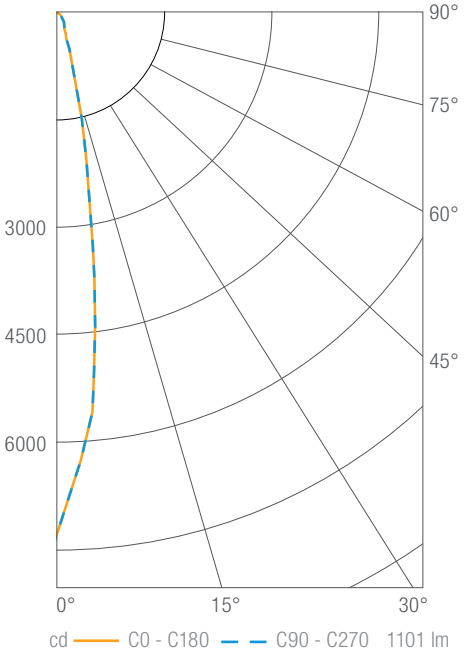

Luminous Intensity

Gamma	C 0°
0º	7280
5º	5603
10º	2489
15º	875
20º	381
25º	247
30º	194
35º	161
40º	122
45º	90
50º	64
55º	45
60º	28
65º	16
70º	7
75º	4
80º	2
85º	1
90º	0

Values in candela

Zonal Lumen Summary

Zone	Lumens	Luminaire %
0-30	868	79
0-40	968	88
0-60	1078	98
0-90	1100	100
0-180	1101	100

Illuminance Chart

Distance from LED	Foot Candles	Diameter
3'	809	0.9'
6'	202	1.7'
9'	90	2.6'
12'	51	3.4'

Beam Angle: 16°

© 2024 DMF Lighting. All Rights Reserved. Specifications subject to change without notice. See website for U.S. and international patent information.